Good to *know*

Don't forget!

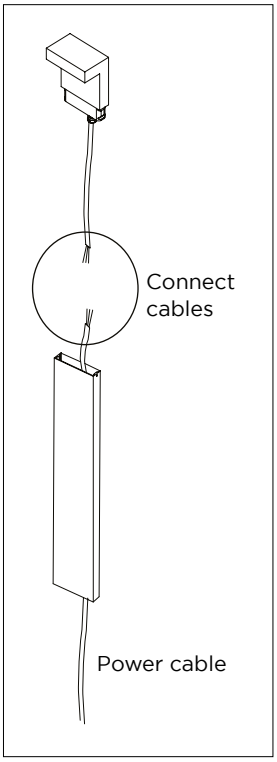

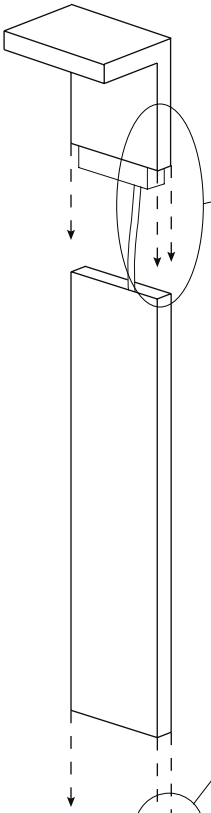

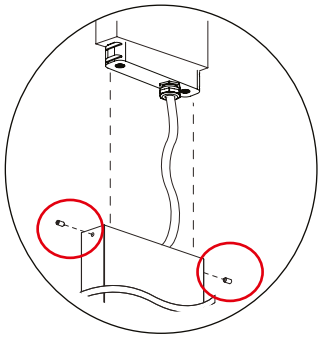

Connect both parts by means of the screws.

When the concrete is dry, slide the base over the ground fixation and fix with the screws.

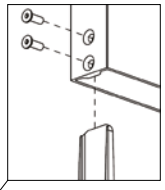

Put the ground fixation in the liquid concrete. Make sure it can dry with the ground fixation leveled.

Only this area in concrete

Tube with power cable

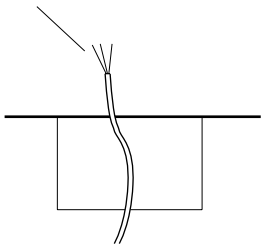

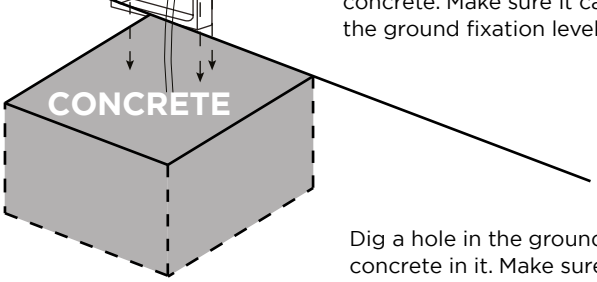

Dig a hole in the ground and pour concrete in it. Make sure to foresee some tubes for the power cables!